ISSN 1063-7850, Technical Physics Letters, 2011, Vol. 37, No. 8, pp. 721–723. © Pleiades Publishing, Ltd., 2011.
Original Russian Text © Yu.I. Zhavrin, M.S. Moldabekova, I.V. Poyarkov, V. Mukamedenkyzy, 2011, published in Pis'ma v Zhurnal Tekhnicheskoĭ Fiziki, 2011, Vol. 37, No. 15, pp. 62–68.

Experimental Study of Diffusion Instability in Three-Component Gas Mixture without Density Gradient

Yu. I. Zhavrin, M. S. Moldabekova, I. V. Poyarkov*, and V. Mukamedenkyzy

Institute of Experimental and Theoretical Physics, Kazakh National University, Almaty, Kazakhstan

Kazakh National Pedagogical University, Almaty, Kazakhstan

**e-mail: p-igor@inbox.ru*

Received March 2, 2011

Abstract—The process of binary (propane–nitrous oxide) gas mixture diffusion into carbon dioxide was experimentally studied in a two-compartment setup at various component concentrations and pressures. Regimes of mixing are determined depending on the initial concentrations of binary mixture components.

DOI: 10.1134/S1063785011080153

Previous investigations of the isothermal diffusion process in some multicomponent gas mixtures showed that, under certain conditions, molecular diffusion leads to the appearance of convective flows. This phenomenon is called diffusion instability (DI) or mechanical equilibrium instability [1, 2]. The notion of DI includes the appearance of macroscopic flows (together with a hydrodynamic flow due to the diffusion baroeffect) on the background of a diffusion process. Powerful convective fluxes that accompany the isothermal diffusion in a closed system (in this case, a two-compartment setup) are several dozen times greater than the diffusion fluxes. The violation of a mechanical equilibrium in a closed volume in diffusion experiments cannot be explained by manifestations of the well-known Torr's effect [3] or by the action of a hydrodynamic flow that arises due to the diffusion baroeffect. The superposition of convective flows on the molecular mass transfer significantly distorted the anticipated results of diffusion in multicomponent gas mixtures. All of these phenomena should be taken into account in the design and development of mass-exchange processes, e.g., the synthesis of ammonia from natural gas [2].

An investigation of the nature of the DI phenomenon poses rather complicated tasks, since its appearance depends on various conditions and numerous parameters of the system, including differences in the coefficients of diffusion and viscosities of components, the initial compositions, the arrangement of gases relative to the diffusion channel, the geometry and orientation of the channel (relative to the vertical direction), pressure, and temperature. Effects that were previously observed under the conditions of convective flows developed in the course of diffusion, included (i) the existence of maxima in the intensity of concentration depending on the pressure, (ii) repeated transitions of the system from stable to unstable state (and vice versa), and (iii) anomalous enrichment of the gas mixture with one of the components [4]. Based on the previous investigations, the following necessary conditions were established for the appearance of DI [5] (here and below, ρ_i is the density of the ith component and D_{ij} is the coefficient of ith component diffusion in the jth component):

1. A binary gas mixture (1 + 2) occurs in the upper compartment and a pure gas (3) is in the lower compartment ($\rho_2 > \rho_3 > \rho_1$; $\rho_{(1+2)} < \rho_3$; $D_{13} > D_{23}$).

2. A binary gas mixture (1 + 2) occurs in the lower compartment and a pure gas (3) is in the upper compartment ($\rho_2 > \rho_3 > \rho_1$; $\rho_{(1+2)} > \rho_3$; $D_{13} > D_{23}$).

3. A binary gas mixture (1 + 2) occurs in the upper compartment and another binary mixture (3 + 2) is in the lower compartment ($\rho_2 > \rho_3 > \rho_1$; $\rho_{(3+2)} > \rho_{(1+2)}$; $D_{12} > D_{32}$).

4. A binary gas mixture (1 + 2) and a pure gas (3) can occurs either in the upper or in the lower compartment; ($\rho_2 > \rho_3 > \rho_1$; $\rho_{(1+2)} = \rho_3$; $D_{13} > D_{23}$). In this variant, an unstable process is possible for any orientation of the mixtures, but it depends on some other parameters (e.g., pressure).

An analysis of the observed unstable processes showed that convective flows in a gaseous system appeared when the mixture components had significantly different molecular masses. In this context, the question naturally arises as to whether a convective mass transfer will appear in a gaseous system when the density gradient is zero for any change in the thermodynamic parameters of the mixture.

In order to study this situation, we have used a three-component gas mixture that includes propane (C_3H_8), nitrous oxide (N_2O), and carbon dioxide (CO_2). These gases are characterized by the following densities under normal conditions: $\rho_{C_3H_8} = 1.8037$ kg/m^3; $\rho_{CO_2} =$

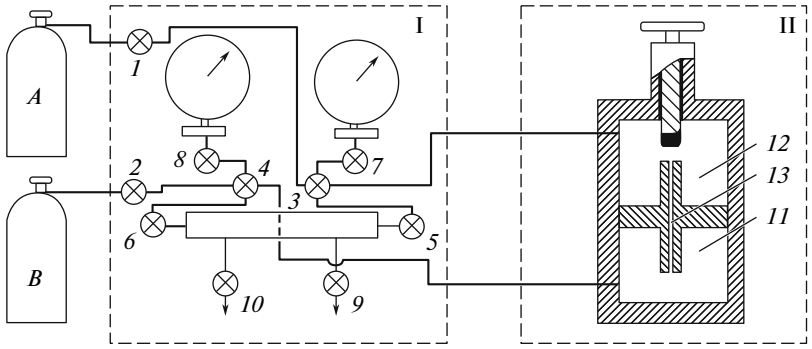

Fig. 1. Schematic diagram of experimental setup: (*A*, *B*) gas containers; (I) gas preparation system; (II) two-compartment diffusion cell; (*1–10*) needle leak valves; (*11*) lower compartment; (*12*) upper compartment; (*13*) diffusion channel.

1.8003 kg/m^3; ρ_{N_2O} = 1.8004 kg/m^3 [6]. Therefore, according to the Mendeleev–Clapeyron equation, no density gradient between sides of the diffusion channel would take place irrespective of the thermodynamic parameters (pressure, concentration and arrangement of components in the system). According to the aforementioned conditions, a DI arises if there is a difference between the diffusion coefficients of components. In the system under consideration, the mutual diffusion coefficients of gases at room temperature and atmospheric pressure are also rather close, i.e., $D_{CO_2C_3H_8} = 0.0863 \times 10^{-4}$ m^2/s; $D_{N_2O-C_3H_8} = 0.0860 \times 10^{-4}$ m^2/s; $D_{CO_2-N_2O} = 0.1170 \times 10^{-4}$ m^2/s [6]. Therefore, the isothermal diffusion process in three-component systems based on these gases must proceed without violation of the mechanical equilibrium.

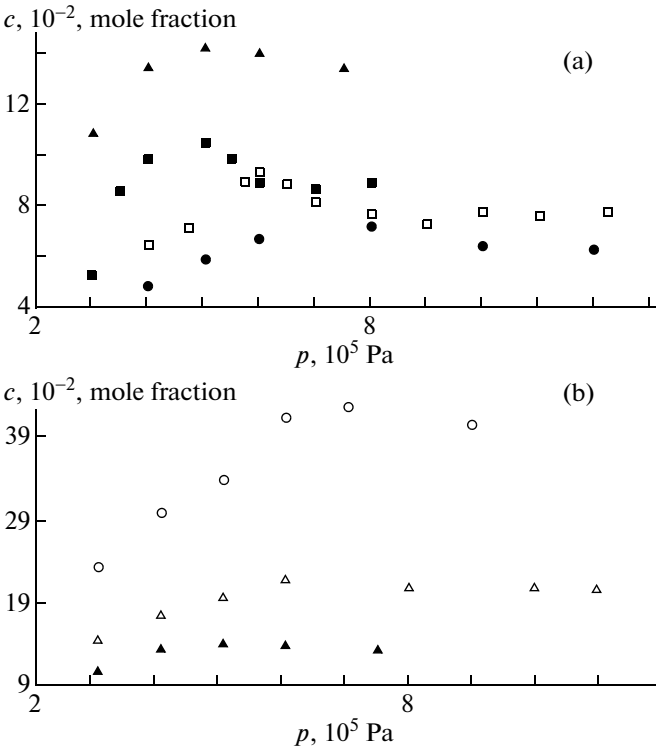

Fig. 2. Experimental plots of the amount of diffusate (propane) versus excess pressure p for various systems. (●) $0.188C_3H_8 + 0.812N_2O–CO_2$; (▲) $0.360C_3H_8 + 0.640N_2O–CO_2$; (□) $0.220C_3H_8 + 0.780N_2O–CO_2$; (△) $0.570C_3H_8 + 0.430N_2O–CO_2$; (■) $0.250C_3H_8 + 0.750N_2O–CO_2$; (○) $0.810C_3H_8 + 0.190N_2O–CO_2$.

The experiments were conducted in a setup consisting of two parts (Fig. 1) [2, 4, 7], including a two-compartment diffusion cell and a gas preparation system with needle leak valves for filling the compartments with initial gases and taking gas samples for analysis after the termination of the experiment. The two-compartment diffusion cell comprised upper and lower compartment volumes $V_I = 2.268 \times 10^{-4}$ m^3 and $V_{II} = 2.145 \times 10^{-4}$ m^3, respectively, connected by a diffusion channel of length $L = 1.7 \times 10^{-2}$ m and cross section $S = (0.05 \times 0.006) \times 10^{-4}$ m^2.

In our experiments, a binary mixture of propane and nitrous oxide (with variable ratio of components) occurred initially in the upper compartment of the diffusion cell, while carbon dioxide filled the lower compartment. The duration of each experimental run was 1200 s. This period of time was quite enough to gain information about the character of mixing in the system. The pressure was varied from 0.2 to 2.9 MPa, and the molar fraction of propane in the binary mixture was varied within 0.188–0.810. The upper limiting pressure corresponded to conditions under which propane is in the gas phase. The lower limit was determined by the possibility of determining the composition of the sample on a gas chromatograph (the error of gas concentration determination did not exceed 5%).

The results of experiments are summarized in Fig. 2. An analysis of these data leads to the conclusion that the isothermal gas mixture $C_3H_8 + N_2O–CO_2$ exhibits convection (structured flows) of variable intensity, which is characteristic of the DI phenomenon. Figures 2a and 2b show that the maximum transfer of diffusate (propane) is observed at a certain pres-

sure (p_{max}) that is dependent on the excess pressure in the diffusion cell. An analogous variation in the diffusate concentration was previously observed for isothermal diffusion in the He + Ar–N_2 [7] and H_2 + Ar–N_2 [8] systems, where the heavy component was argon. However, the pressure at which a maximum change in the concentration of argon was observed in these systems remained unchanged.

As can be seen from the data presented in the table, the values of p_{max} vary for binary mixtures with different initial concentrations of components. An increase in the diffusate concentration in the lower compartment is proportional to an increase in its content in the initial mixture. Note also that an increase in the C_3H_8 concentration in the binary mixture significantly influences the anomalous course of diffusion. On the whole, the data in Fig. 2 and the table show that an increase in the C_3H_8 concentration in the binary mixture leads initially to a decrease, then a increase in the pressure corresponding to the maximum transfer of propane in a particular system. This behavior is not inherent in molecular diffusion.

This character of the diffusion process and its dependence on the pressure in a three-component gaseous system was observed for the first time. It is possible that the observed behavior is determined by the physical properties of mixing components. For example, the phase transition pressure at room temperature (T = 298.0 K) in propane is $p \approx 0.9$ MPa, while the corresponding values for nitrous oxide and carbon dioxide are significantly higher ($p \approx 6.0$ MPa). This is indicative of the fact that the partial density of propane increases with the pressure faster than the partial densities of two other components. As a result, the binary mixture in the upper compartment becomes heavier than the pure component in the lower compartment. Thus, a positive density gradient arises, which drives a convective mass transfer in the diffusion channel despite the absence of density gradient in the initial system.

In conclusion, it should be emphasized that gaseous systems without density gradient between two sides of a diffusion channel can feature not only diffusion, but also a convective regime of mixing under the conditions of variation of some parameters. The character and intensity of this convective process depend on the concentrations of components and the degree of manifestation of the individual physical properties of mixing components.

Pressure corresponding to maximum transfer of diffusate (propane) in various gaseous systems

System	Pressure, p_{max}, 10^5 Pa	C_3H_8 concentration in lower compartment, mol. fraction
$0.188C_3H_8 + 0.812N_2O–CO_2$	8.77	0.072
$0.220C_3H_8 + 0.780N_2O–CO_2$	6.81	0.094
$0.250C_3H_8 + 0.750N_2O–CO_2$	5.54	0.108
$0.360C_3H_8 + 0.640N_2O–CO_2$	5.83	0.143
$0.570C_3H_8 + 0.430N_2O–CO_2$	6.81	0.221
$0.810C_3H_8 + 0.190N_2O–CO_2$	7.79	0.428

REFERENCES

1. H. E. Huppert and J. S. Turner, J. Fluid Mech. **106**, 299 (1981).
2. Yu. I. Zhavrin, V. N. Kosov, D. U. Kul'zhanov, and K. K. Karataeva, Pis'ma Zh. Tekh. Fiz. **26** (24), 76 (2000) [Tech. Phys. Lett. **26**, 1108 (2000)].
3. H. L. Torr, AIChE J. **10**, 448, 460 (1964).
4. V. N. Kosov, V. D. Seleznev, and Yu. I. Zhavrin, Zh. Tekh. Fiz. **67** (10), 139 (1997) [Tech. Phys. **42**, 1236 (1997)].
5. V. N. Kosov, Yu. I. Zhavrin, and I. V. Poyarkov, Khim. Komp. Modelir., No. 10, 184 (2002).
6. N. B. Vargaftik, *A Reference Book on Thermiophysical Properties of Gases and Liquids* (Stars, Moscow, 2006) [in Russian].
7. S. M. Belov, Yu. I. Zhavrin, and N. D. Kosov, *Diffusion Instability of He–Ar Mixture at Various Pressures and Concentrations* (Kaz. Gos. Univ., Alma-Ata, 1985), Deposited at KazNIINTI (14.10.85), No. 1073 [in Russian].
8. Yu. I. Zhavrin, N. D. Kosov, S. M. Belov, and F. Z. Kurmakaev, *Investigations of Transfer Processes* (Alma-Ata, 1985), pp. 12–16 [in Russian].

Translated by P. Pozdeev